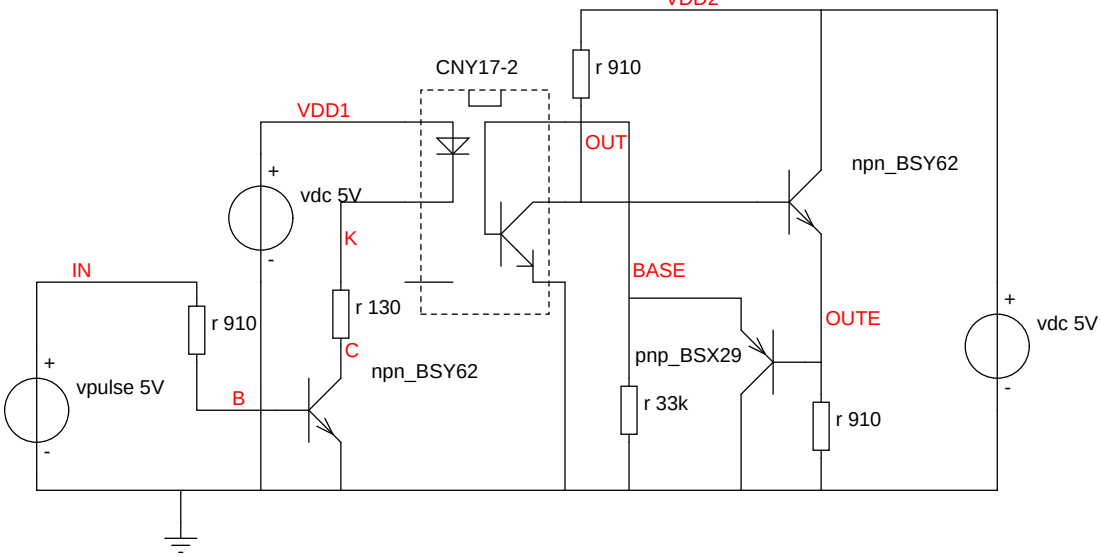
VDD2
CNY17-2
r 910
VDD1
OUT
npn_BSY62
+
vdc 5V
-
K
IN
BASE
r 130
r 910
OUTE
+
vdc 5V
-
C
pnp_BSX29
+
vpulse 5V
-
B
npn_BSY62
r 33k
r 910