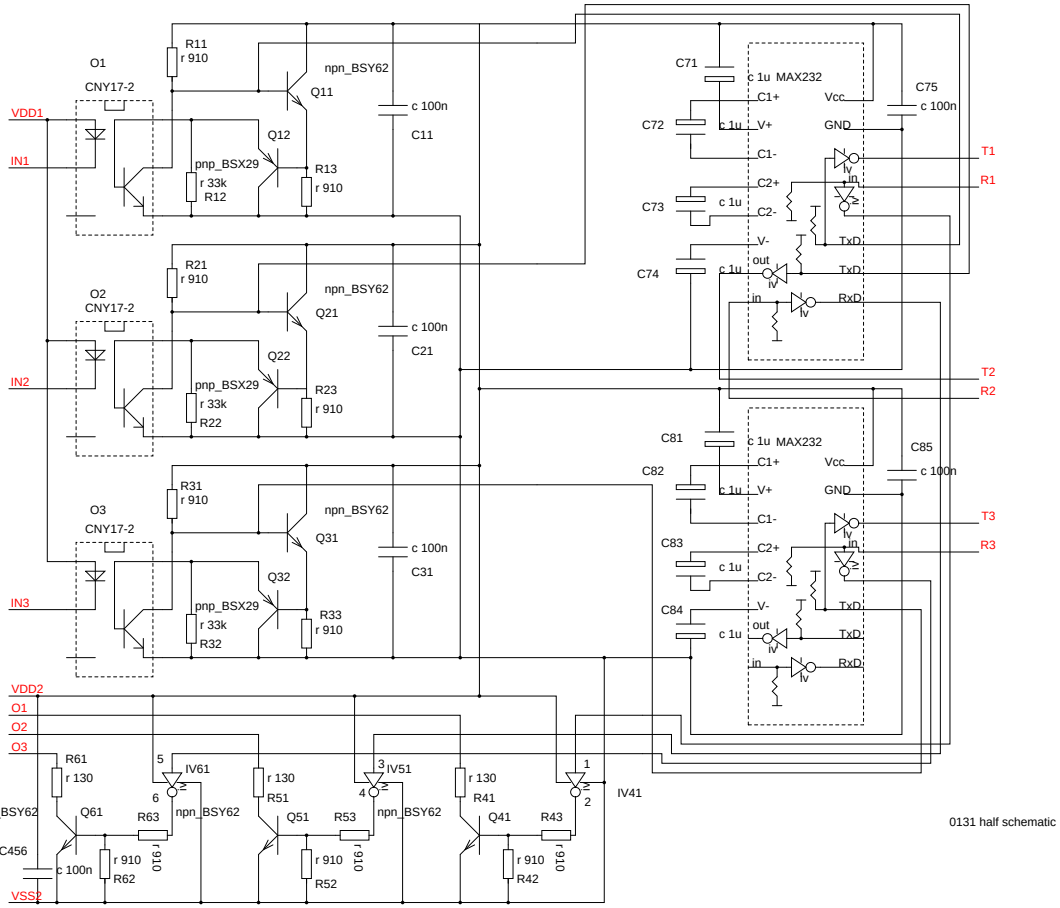

0131 half schematic